

Qoltec Uninterruptible Power Supply UPS Line Interactive | Monolith | 850VA | 480W | LCD | USB | RJ45

Product code: 53979

The Qoltec Line Interactive UPS power supply is a modern device that ensures stable operation of the connected computer even in the event of a power outage. Its features include:
- automatic voltage regulation (AVR)
- -cold start
- LCD display.

It meets the requirements of anyone who wants to have control over the stable operation of their device regardless of fluctuations in the power supply.

DISCOVER SECURE ENERGY



Each of us has often dealt with voltage drops at home or at work. Sometimes, their only consequence is the need to restart the computer. But how many times have you lost important data due to such an event, data that wasn't saved on the disk, or encountered a device failure? If the above situations are familiar to you, **we have a solution** that will address problems caused by power outages or voltage drops. The **UPS Qoltec 850VA 480W LCD USB RJ45** uninterruptible power supply is the solution that ensures a constant flow of energy necessary for the stable operation of your computer.

MODIFIED SINE – SIMPLE DESIGN, REDUCED FAILURE RATES



Devices that do not require a pure sine wave, such as computers, laptops, or other data processing devices, will work without any issues with a UPS with a modified sine wave. **It produces an output sine wave with an alternating voltage of an approximated (modified) waveform, whose effective value is the same as the value of the sinusoidal waveform** present in the power grid. This type of power supply is primarily characterized by **lower failure rates and a simple design**.

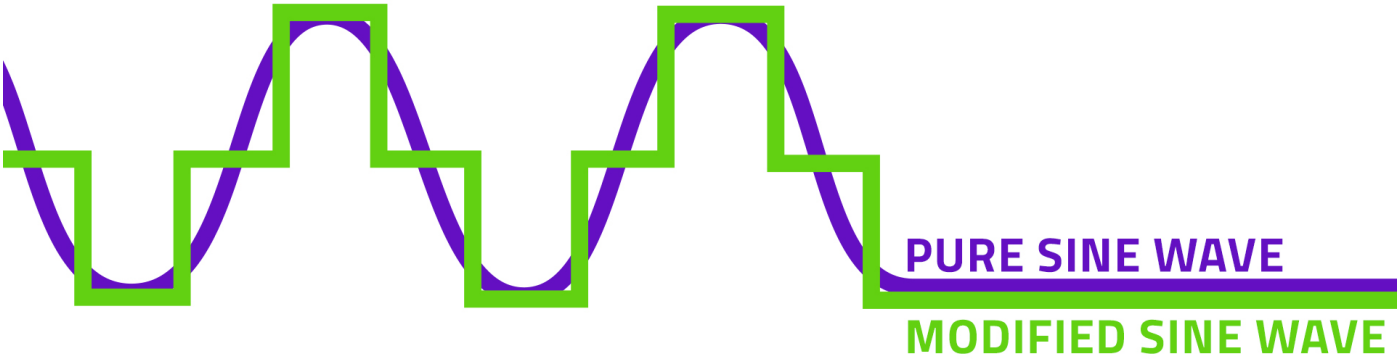

HOW DOES A LINE INTERACTIVE UPS WORK?



The UPS Line Interactive power supply **operates based on a built-in AVR system** (Automatic Voltage Regulation). **This means that the supplying voltage is automatically regulated**. If there's a decrease or increase in voltage, the AVR system corrects it to a level close to the nominal one. The presence of such a solution in the UPS positively affects the durability of the built-in battery. Additionally, the **UPS is equipped with a maintenance-free battery** , ensuring stable operation during computer power outages. During this time, you can save important data on the disk or finish another level of your game. The battery charging process up to 90% efficiency takes up to 6 hours.

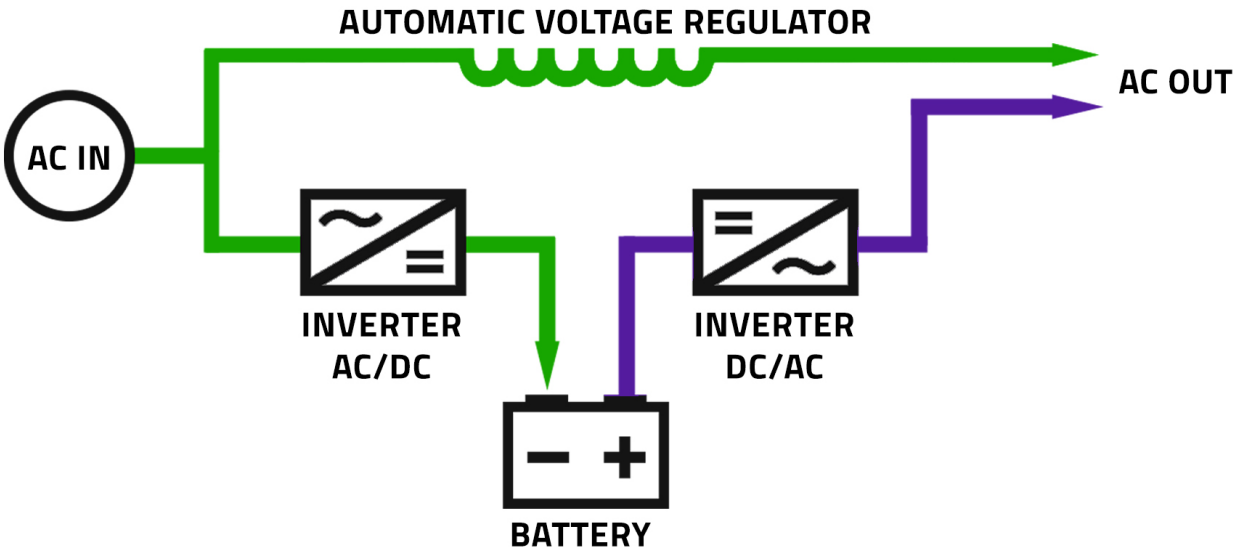

DISCOVER A BETTER WORK FORMAT



The 850VA UPS power supply offers:
- **Automatic Voltage Regulation (AVR) –** this ensures not only stable power supply and lower battery consumption, but above all, protection of the device from excessively high/low voltage,
- **cold start –** a very useful feature - in case of a power outage, you can start, for example, a computer by connecting it directly to the UPS. This allows you to quickly, at any time, copy important files to a USB memory or send an important email,
- **protection** against overload, discharge, and overcharge,
- **USB port –** thanks to the power management software, you can monitor its operation in real-time and customize it to your needs,
- **RJ45 port –** provides protection against surges through the LAN network,
- **audio alarm** signaling **low battery level** and **audible fault indication**,
- 1 built-in battery.

SIMPLY AND CLEARLY - FOR YOUR COMFORT

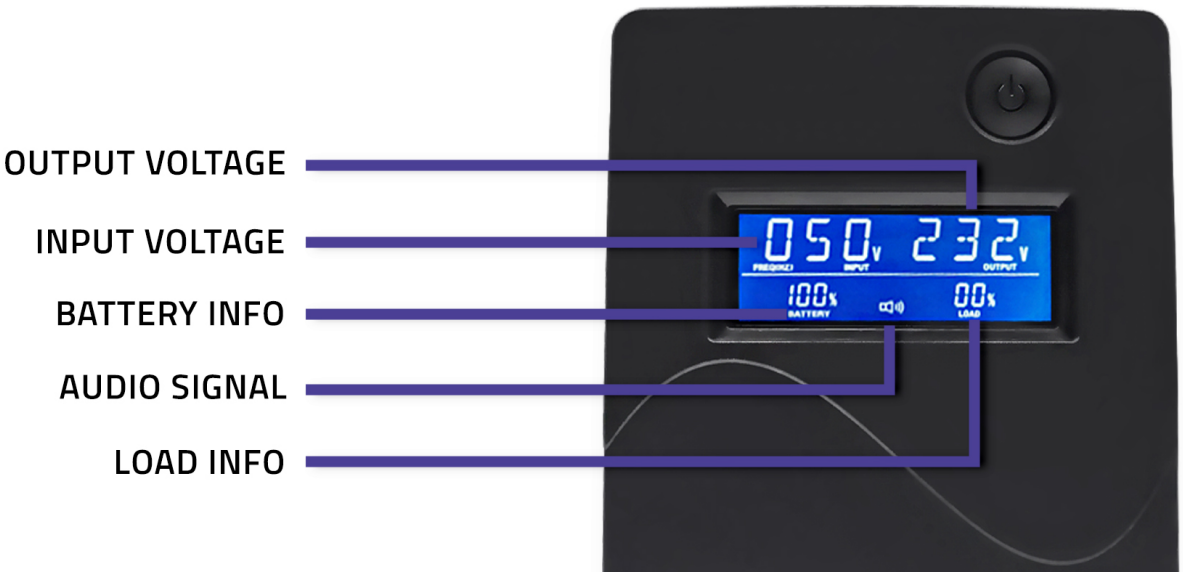

The built-in **LCD display** ensures **easy management of device operation.** You receive real-time information about the status and parameters, making **working with the power supply easy, quick, and reliable.**

TRUST CONFIRMED BY WARRANTY



Do you value high-quality products when making a purchase? **Our solutions will meet your expectations.** Each of the uninterruptible power supply (UPS) solutions offered by us is covered by a 24-month warranty, effective from the date of purchase.

TECHNICAL DATA

Producer	Qoltec
UPS type	Line Interactive
Power	480W
Rated Power	850VA
Wave form	Modified sine wave
Input voltage	140 VAC ~ 300 VAC
Output voltage	220 VAC ~ 230 VAC 5%
Input frequency range	50 - 60 Hz 1 Hz
Built-in battery	Yes
Number of batteries	1
Battery capacity	9Ah
Battery voltage	12V
Charging time	4 - 6 h to 90% capacity
Transfer time	2 - 6 ms
Output sockets	2 x SCHUKO (type F CEE 7/3) 1 x USB type B (port for communication with the device) 2 x RJ45
Communication interface	USB
Screen	LCD
Noise level	< 40dB
Usage	Data processing centers; industrial and manufacturing environments; medical centers
Safety	- Overload protection - Against discharge - Against overcharging

Additional information	- cold start - audio signal indicating low battery level - audio alert for malfunction - when operating on battery power with no load or a load not exceeding 30W, the UPS will automatically switch off after 5 minutes.
Remarks	Network uninterruptible power supplies designed for telecommunications equipment and data processing hardware, commonly known as uninterruptible power supplies (UPS). In the event of a power failure, they provide a "reserve" of energy, thereby protecting against data loss.
OTHER PARAMETERS	
Housing color	Black
Operating temperature	0°C ~ +40°C
Dimensions (D/L x W x H)	286 x 100 x 144 mm
Package contents	- UPS with built-in power cord (1 x SCHUKO type E) 1.15 m - USB cable - Software CD - User manual - Warranty card
Package depth / length [mm]	142
Package width [mm]	323
Package height [mm]	222
Net weight [kg]	4.6690
Gross weight [kg]	4.9460
Certificate	CE
Warranty	24 months
EAN code	5901878539799

LOAD	Power backup time
100W	20 min
200W	6 min
300W	2 min
500W	0 min
1000W	0 min